Ersatzteile RAS-(2-2.5)WHVRP

KAUT

No.	Part Name	Replacement Part		Remarks	Voltage 230V/50Hz	
		Draw. No.	Order No.		Q'ty Per Unit	
					RAS-2WHVRP	RAS-2.5WHVRP
1	Upper Cover	17A25313A	P30649		1	1
2	Front Cover	17B47092A	P30650		1	1
3	Air Grille	17A25315A	P30651	Outlet	1	1
4	Service Cover	17F17150A	P30652		1	1
5	Side Cover R	17F21452A	P31308		1	1
6	Side Cover L	17A25317D	P30654		1	1
7	Fan Motor	17F12771B	P30659		1	1
8	Propeller Fan	17A25307A	P30661		1	1
9	Special Nut	17B38717A	P27456	For Propeller Fan	1	1
10	Bottom Base Assy	17B47094A	P30666		1	1
11	Compressor	17F25608A	P32089		1	1
12	Crankcase Heater	17A28978A	P32087		1	1
13	Vibration Absorber	17G89712A	P27461		3	3
14	Rubber Cap	17C90956A	P27462		1	1
15	Special Nut	17G89713A	P27463		2	2
16	C-Cover Assy	17C91217D	P30668		1	1
17	Heat Exchanger	17B47091A	P30669		1	1
18	Accumulator	17B47101A	P30673		1	1
19	Reversing Valve	17B48213A	P30963		1	1
20	Coil	17B50474A	P32086	For Reversing Valve	1	1
21	Pressure Switch	17C83435A	P26839	High Pressure	1	1
22	Pressure Switch	17F25607A	P32085	For Control	1	1
23	Check Joint	17F17126A	P30680		1	1
24	Expansion Valve	17B47097A	P30683		1	1
25	Coil	17F17129A	P30685	For Expansion Valve	1	1
26	Stop Valve	17F17122A	P30688	Liquid Line	1	1
27	Stop Valve	17F17124A	P30686	Gas Line	1	1
28	Thermistor	17B47099A	P30691	TA	1	1
29	Thermistor	17F17131A	P30692	TE	1	1
30	Thermistor	17F17132A	P30693	TB	1	1
31	Thermistor with Comp. Harness	17C90955A	P27474	TD with Comp. Harness	1	1
32	Electrical Box Assy	17H37357B	P32052		1	1
33	Fuse	17A19127A	P27478	3A	2	2
34	Reactor	17A18986A	P27482		1	1
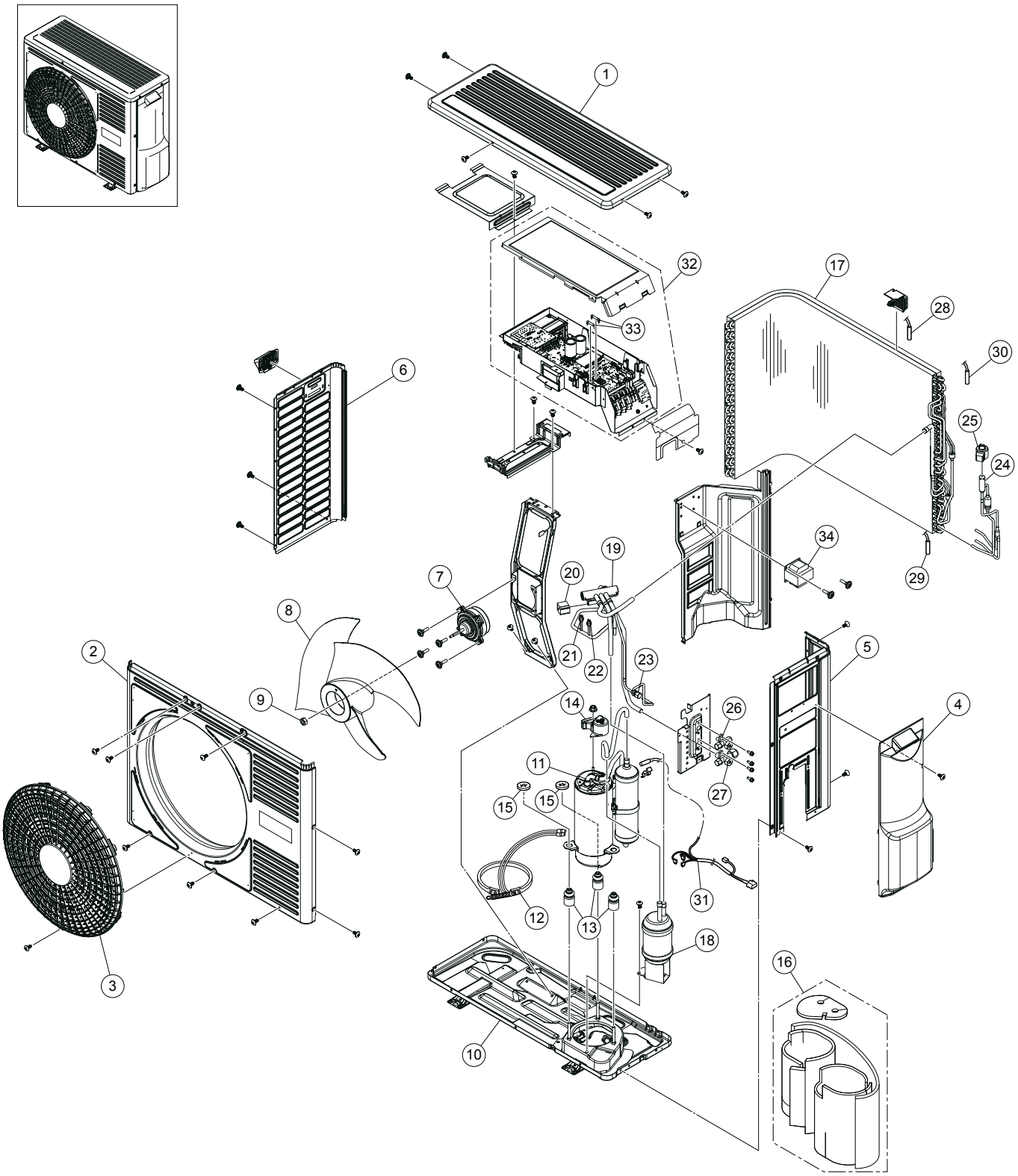
Ersatzteile RAS-(2-2.5)WHVRP