Ersatzteile RAD-35RPE

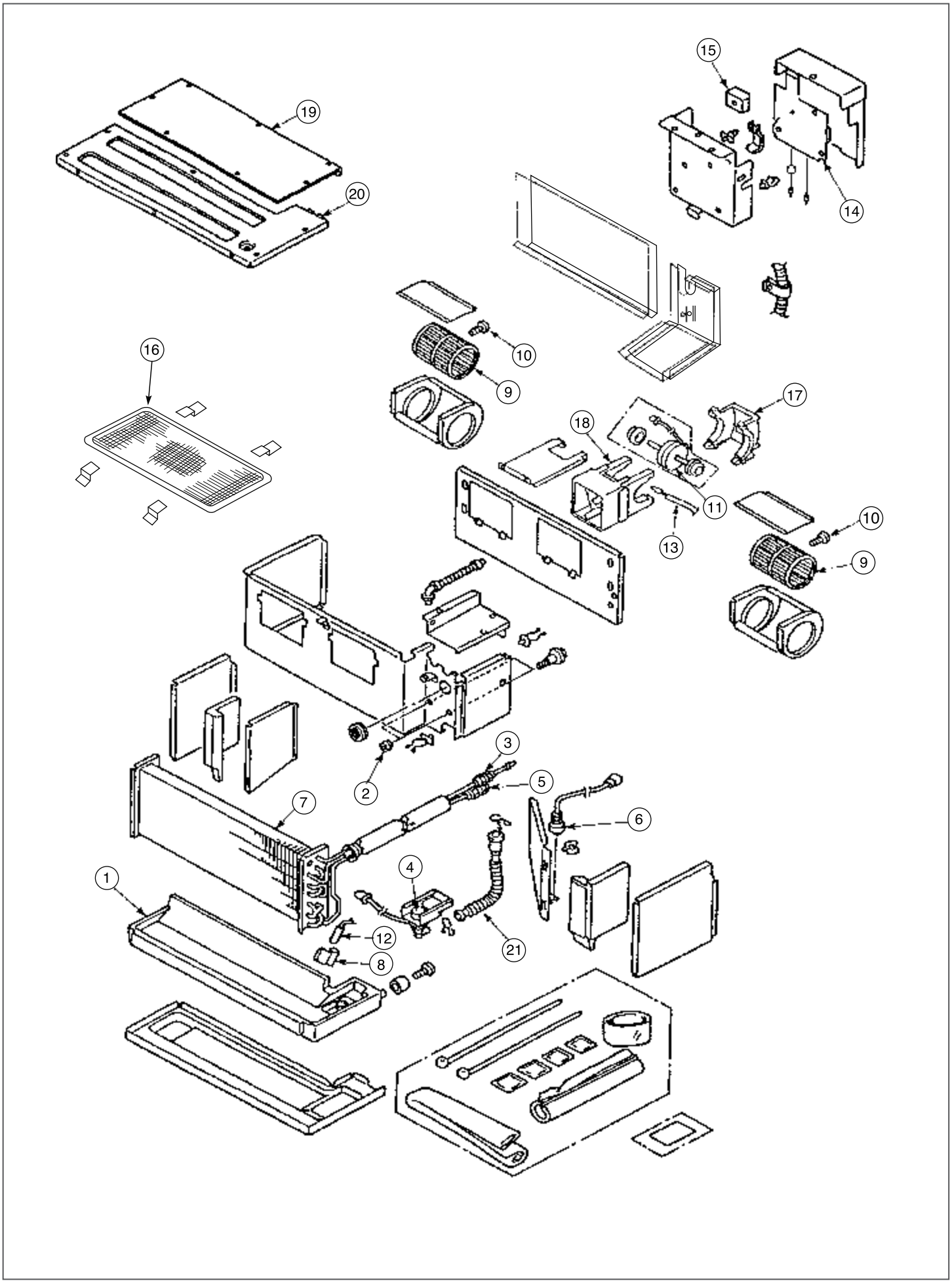

Ersatzteile RAD-35RPE

KAUT

NO.	PART N0. RAD-35RPE	Q'TY / UNIT	PARTS NAME
1	PMRAD-18QPB R13	1	DRAIN PAN
2	PMRAMD-350BW R03	2	FAN MOTOR SUPPORT RUBBER
3	PMRAD-18RPA R04	1	UNION (2)
4	PMRAD-18QPB R09	1	DRAIN PUMP
5	PMRAD-18RPA R05	1	UNION (3)
6	PMRAMD-350BW R11	1	FLOAT SWITCH
7	PMRAD-18QPB R02	1	CYCLE ASSY
8	PMRAD-18QPB R11	1	THERMISTOR SUPPORT
9	PMRAD-18QPB R07	2	SIROCCO FAN
10	PMRA-353B R04	2	FAN BOLT
11	PMRAD-18QPB R06	1	FAN MOTOR
12	PMRAMD-40GX R02	1	THERMISTOR (HEAT)
13	PMRAD-18QPB R08	1	THERMISTOR (TEMPERATURE)
14	PMRAD-35QPB R01	1	P.W.B. (MAIN)
15	PMRAM-18QPB R12	1	TERMINAL BOARD (3P)
16	PMRAD-18NH7 002	1	FILTER
17	PMRAD-18QPB R04	1	FAN MOTOR SUPPORT
18	PMRAD-18QPB R03	1	BASE (FAN MOTOR)
19	PMRAD-18NH7 S03	1	UPPER PLATE (2)
20	PMRAD-18QPB R10	1	UPPER PLATE (1)
21	PMRAD-18QPB R05	1	DRAIN PIPE